FLAT®

engineering stability

STABILIZING & ALIGNING TABLES PLUS SO MUCH MORE...

LETTER FROM THE CEO

At FLAT,® we strive to create a great dining experience!

Wobbly and misaligned tables present challenges for foodservice and hospitality businesses every day; they ruin customer experiences, create hygiene issues, waste time, lose operators revenue, and damage brands.

Our multi-award-winning range of FLAT® Table Bases and FLAT® Equalizers (for existing tables) stabilize and align tables eliminating these challenges forever. Our products are available globally so you can benefit from them wherever you are!

In this catalog, we're thrilled to be unveiling a number of exciting new product ranges, including pneumatic Height-Adjustable Table Bases, a portfolio of EQ (Equalizers) Table Bases and a range of Specialized Table Bases—and of course, they're all wobble-free!

If you are a Chain, Architect or Designer, Product Specifier, or Manufacturer and cannot find what you need within our core range, our product engineers can assist with merging our technologies with your specialist development requirements.

As our business and product ranges grow, we remain committed to providing customers with best-in-class products that provide outstanding operational benefits and a demonstrable return on your investment (ROI). We're committed to reducing our environmental impact and fulfilling our responsibilities to the communities within which we work.

I hope that you enjoy the catalog and my team and I look forward to working with you!

Barry Mancell | Chief Executive Officer

FLAT®: THE MARKET LEADERS STABILIZING & ALIGNING TABLES

The year was 2004, and FLAT® was born; Australian inventor Tony Pike was on to something big as he set out to make wobbly & misaligned tables a thing of the past. Just how big Tony's idea would become escaped imagination as the technology he was about to engineer would soon revolutionize an industry.

Some years later, following extensive investment in R&D and testing, FLAT developed patented, proprietary hydraulic technology to stabilize and align items on uneven surfaces. This 'PAD' technology was initially integrated under a range of FLAT® Table Bases. The PAD incorporates adjusting feet and connects them through a hydraulic system that automatically adjusts and stabilizes the table instantly. A series of valves within the PAD lock the feet in place until it is moved and enable users to align adjoining table tops. Today, we manufacture over 40 different styles of AUTO-ADJUST table bases to complement a range of environments and customer requirements.

In 2017, following significant market demand, FLAT® Equalizers were launched. Using many of the hydraulic characteristics found in FLAT's PAD technology, FLAT created a retrofit solution for EXISTING (wobbly and misaligned) tables. Equalizers replace a table's existing screw-in feet and stabilize it following a press on the table top.

Today, FLAT Table Bases and FLAT Equalizers are available in over 40 countries and used by some of the world's leading brands. In addition to FLAT's patented table stabilizing products, FLAT also sources specialty table bases for customers and provides licensing opportunities for other table base manufacturers to incorporate FLAT technology as an OEM product. FLAT is quickly becoming the single provider for our customers' table base requirements.

TABLE OF **CONTENTS**

3 . . . . . FLAT History
4 . . . . . FLAT Global Capabilities
6 . . . . . Why FLAT?
8 . . . . . FLAT AUTO-ADJUST Table Bases
26. . . . FLAT Height-Adjustable Table Bases
30. . . . FLAT Equalizers
32. . . . FLAT EQ Table Bases
34. . . . FLAT Specialized Table Bases
36. . . . Custom Options
38. . . . Designers & Specifiers
39. . . . Licensing Our Technology
40 . . . Imperial Table Top Size Guide
44. . . . Metric Table Top Size Guide
47. . . . Index

FLAT® | GLOBAL CAPABILITIES

A LOCAL PARTNER, AROUND THE WORLD

At FLAT®, we have a knowledgeable team of local professionals in every major market we serve around the world. We understand that every market has its own unique challenges and specific customer expectations. Our team provides relevant and effective market insights and works closely with our global network of FLAT dealers, ensuring that we can meet your requirements wherever you are.

Our company began in the cafés and restaurants of Australia, with an idea that customer experiences needed to be elevated and protected. That same Australian spirit of ingenuity and intrepidity is evident in every product and professional interaction we have around the world.

A GOOD GLOBAL NEIGHBOR

We believe that maintaining and developing good environmental practices is part of becoming a successful global brand.

Here are just a few examples of the green initiatives that we've invested in for the sake of our planet, and all our neighbors.

MANUFACTURING

- ***Reduced CO2 Emissions:*** We use electric furnaces, rather than coal-fired furnaces, in all our cast iron manufacturing forges.
- ***Reduced Finishing and Material Waste:*** Our automated production systems improve quality and reduce waste.
- ***Reduced Landfill Impact:*** All FLAT casting tools are recyclable after use.
- ***Improved Energy Efficiency:*** We use lower temperature coating materials that use less energy.

PRODUCTS AND MATERIALS

- ***Recyclable:*** Our cardboard packaging and strapping is fully recyclable.
- ***Sustainable:*** FLAT table bases are recyclable, and all parts can be replaced to extend product life.
- ***Reduced Carbon Footprint:*** Our products are flat packed to maximize shipping efficiency.
- ***Eco-Safe:*** All PAD and Equalizer (the technologies behind FLAT) materials are inert and environmentally safe.

FLAT products remove thousands of wasted napkins and props wedged under tables each day. This reduces waste and costs for the owner/operator.

WHY **FLAT®?**

- **Only 56% of people would reconsider returning to an establishment where a wobbly table spoiled their experience.***
- **68% of people believe that experiencing a wobbly table would give them a negative impression of an establishment.***

When you invite guests to your establishment, you're promising an excellent experience. If the first thing they encounter is a wobbly table, the experience is tarnished and that promise is broken from the start. Annoyed customers either have to put up with sloshing drinks and tipping food, or try to stuff napkins or sugar packets under the table legs, or perhaps ask a staff member to fix it, resulting in an awkward and off-putting experience where the staff member may be on a dirty floor with the same hands with which they use to bring out food.

Unpleasant experiences like these also often result in negative reviews online, which can hurt your entire brand. Not only is it less likely that those customers will return to your establishment, bad reviews may prevent possible first-time customers from giving you a chance.

Having FLAT® Table Bases or Equalizers in your locations eliminates many of these problems for your guests, staff, and your bottom line. It's not just a solution for wobbly tables, but an investment in your company's brand experience that pays back several dividends. See how FLAT products can support your customers, brand, and operations, plus impact your bottom line.

86% of people believe that sitting at a wobbly table is irritating and distracting.*

YouGov® What the world thinks *Information collected from our survey with YouGov of 1,000+ U.S. citizens.

75% of people think that tables propped up by coasters, napkins, sugar packets, etc. look unsightly.*

SAVE TIME & LABOR COSTS

Having your staff set the table feet before (and during) service, costs you time and money. FLAT will stabilize the table and help you align adjoining tops.

BE MORE HYGIENIC

Ever taken a close look at your tables' feet? Dirt and grime often accumulate there, staff adjust them to stabilize the table, and then serve customers. Avoid contamination issues and be more hygienic.

MAINTAIN YOUR POSITIVE REPUTATION

Dissatisfied customers often take to social media and review websites to complain about ruined experiences caused by wobbly tables. Improve the customer experience with FLAT.

REDUCE BREAKAGE

Every time a glass shatters or plates smash following a fall from a wobbly table, it signifies an increase in your costs. Eliminate breakages and save money.

ELIMINATE CLEANING COSTS

Covering your customers' dry cleaning costs is the least you can do when their suit or dress is ruined by a spillage.

ELIMINATE REPLACEMENTS & REFUNDS

The cost of replacing or refunding ruined meals can add up. Keep your customers happy and your operating costs down.

REDUCE SHRINKAGE

75% of people think that tables propped up by coasters, napkins, sugar packets, etc. look unsightly. They damage your brand image, cost you money, and additional waste.

IMPROVE SAFETY

A spill from a hot coffee or a cut from a shattered glass could cause your customers harm and make your business liable to potential litigation. Reduce the risks with FLAT.

RANGE OF SOLUTIONS

With a huge range of self-stabilizing table bases and FLAT Equalizers to fix your existing tables, FLAT can be the single source for all your table needs.

CERTIFIED TECHNOLOGIES

Our PAD, Equalizer, and pneumatic technologies have been tested to International Standards for safety, stability, durability, and strength by world-renowned FIRA International.

firainternational
Proud to be part of element

FLAT®
AUTO-ADJUST
Table Bases

Return on Investment Calculator

Wobbly and misaligned tables are a hidden but potentially significant cost to your business. Ask your FLAT representative for a tailored cost-saving calculation. We're confident that our products could significantly reduce your operating costs!**

**Cost is calculated over a 3 year period and indicative only. Calculations may vary per location.

BASES **LOADED**

Innovation. Technology. Stability. Alignment. It's what we bring to the table.

Multi-award-winning FLAT® AUTO-ADJUST Table Bases are always on, always working, and always stable—regardless of the situation. Our revolutionary base technology automatically adjusts to the surface below then locks into place. This "World's First" patented technology also allows the user to align multiple table tops together, eliminating problematic table ridges for good.

With over 40 models and designs to suit virtually any environment, application, height, or table top size, we'll have the perfect table solution for you.

AUTOMATIC STABILIZATION
FLAT Table Bases stabilize instantly. When the table moves, the feet sense the change and re-adjust automatically.

ALIGNMENT
FLAT Table Bases help users align adjoining table tops by simply lifting or tilting the table top edges to the required levels.

DESIGN INTEGRATION
Our technology and table bases are designed to integrate perfectly to ensure maximum performance.

ENGINEERED DURABILITY
All FLAT products are manufactured and quality-assured to the highest standards, resulting in exceptional products that you can depend on.

OUTPERFORMS
Our table bases are capable of adapting to a far greater variety of surface inconsistencies than traditional methods of stabilizing tables and deliver superior stability on uneven terrain.

ACCESSIBILITY
A number of our bases provide enhanced accessibility for disabled users and can help operators comply with local legislations.*

*Local disability legislation differs in different regions. Contact us to discuss which product configurations can make you compliant.

AUTO-ADJUST KX30

FLAT®
AUTO-ADJUST
Table Bases

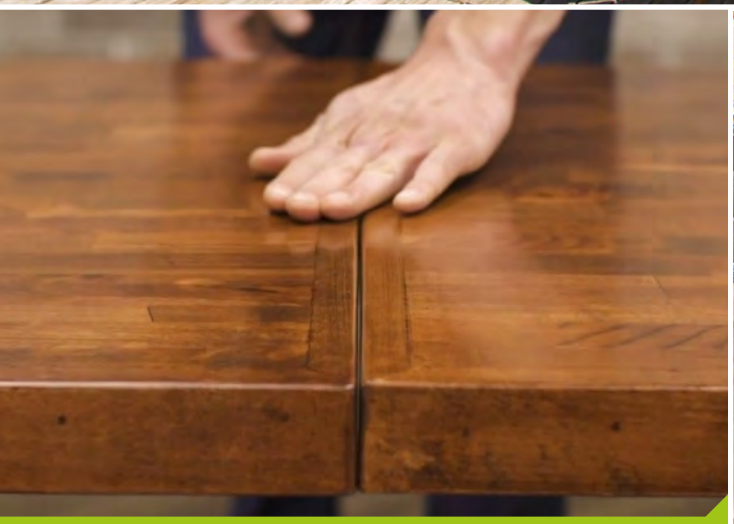

FLAT® Table Bases help users perfectly align adjoining table tops.

AUTO-ADJUST UR22

Joel Sorinski | Theory, Managing Partner

"When we had wobbly tables in the past, we had our servers help, but for sanitary reasons, we really don't want our servers down on the ground, getting dirty and worrying about a wobbly table. It's just not a good representation of who we are."

KX22

FLAT's most popular base, this versatile and classic design is the smallest X-design base we manufacture. Available at dining and bar height or with our height-adjustable post.

ROD
Thicker structural tension rod to hold base together securely.

TOP PLATE
Superior quality—provides extra strength and stability.

POST
Wider diameter of 76mm/3in for structural support with increased wall thickness.

CAST IRON BASE
High-quality casting.

FLAT® TECHNOLOGY INSTALLED
The base and the technology are designed in unison to deliver superior performance and longevity.

SPECIFICATIONS

Material/Finish:	Cast Iron/Textured
Base Span:	560mm/22in
Base Spread:	430mm/17in
Post/Column Width:	76mm/3in

DINING HEIGHT

Weight:	9.5kg/20.9lb
Max Table Top Size (Square):	750mm/30in
Max Table Top Size (Round):	750mm/30in
Max Table Top Weight:	16kg/35lb
Top Plate Size:	330mm/13in

BAR HEIGHT

Height:	1035mm/40.75in
Weight:	10.8kg/23.7lb
Weight With Footring:	12.6kg/27.8lb
Max Table Top Size (Square):	600mm/24in
Max Table Top Size (Round):	650mm/26in
Top Plate Size:	330mm/13in

HEIGHT-ADJUSTABLE (PNEUMATIC)

Min–Max Height:	701–1035mm/27.6–40.75in
Weight:	12.7kg/27.9lb
Max Table Top Size (Square):	600mm/24in
Max Table Top Size (Round):	650mm/26in
Max Table Top Weight:	16kg/35lb
Top Plate Size:	308mm/12in

WARNING: Exceeding maximum recommended table top size and weight will reduce functionality and performance of the technology. See Table Top Size Guide for more info.

KX2230

The KX2230 complements the rest of the KX Series bases and is engineered to accommodate rectangular tops. Available in dining and bar heights or with our height-adjustable post.

ROD
Thicker structural tension rod to hold base together securely.

TOP PLATE
Superior quality—provides extra strength and stability.

POST
Wider diameter of 76mm/3in for structural support with increased wall thickness.

CAST IRON BASE
High-quality casting.

FLAT® TECHNOLOGY INSTALLED
The base and the technology are designed in unison to deliver superior performance and longevity.

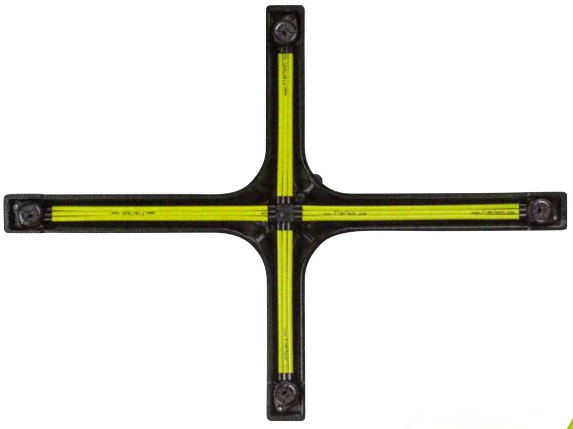

SPECIFICATIONS

Material/Finish:	Cast Iron/Textured
Base Span:	560x750mm/22x30in
Base Spread:	505mm/20in
Post/Column Width:	76mm/3in

DINING HEIGHT

Weight:	12kg/26.4lb
Top Plate Size:	330mm/13in
Max Table Top Size:	750x900mm/30x36in
Max Table Top Weight:	16kg/35lb

BAR HEIGHT

Height:	1035mm/40.75in
Weight:	13.3kg/29.3lb
Weight With Footring:	15.1kg/33.3lb
Max Table Top Size (Rectangular):	600x900mm/24x36in

HEIGHT-ADJUSTABLE (PNEUMATIC)

Min–Max Height:	701–1035mm/27.6–40.75in
Weight:	14kg/30.7lb
Max Table Top Size (Rectangular):	600x760mm/24x30in
Max Table Top Weight:	16kg/35lb
Top Plate Size:	308mm/12in

WARNING: Exceeding maximum recommended table top size and weight will reduce functionality and performance of the technology. See Table Top Size Guide for more info.

KX30

The workhorse of the industry that accommodates a wide range of table top sizes. Provides great stability at dining or bar height or when coupled with our height-adjustable post.

ROD
Thicker structural tension rod to hold base together securely.

TOP PLATE
Superior quality—provides extra strength and stability.

POST
Wider diameter of 76mm/3in for structural support with increased wall thickness.

CAST IRON BASE
High-quality casting.

FLAT® TECHNOLOGY INSTALLED
The base and the technology are designed in unison to deliver superior performance and longevity.

SPECIFICATIONS

Material/Finish:	Cast Iron/Textured
Base Span:	760mm/30in
Base Spread:	570mm/22in
Post/Column Width:	76mm/3in

DINING HEIGHT

Weight:	11.9kg/26.2lb
Top Plate Size:	330mm/13in
Max Table Top Size (Square):	1050mm/42in
Max Table Top Size (Round):	1050mm/42in
Max Table Top Weight:	20kg/44lb

BAR HEIGHT

Height:	1035mm/40.75in
Weight:	13.2kg/29.1lb
Weight With Footring:	15kg/33lb
Max Table Top Size (Square):	900mm/36in
Max Table Top Size (Round):	900mm/36in

HEIGHT-ADJUSTABLE (PNEUMATIC)

Min–Max Height:	701–1035mm/27.6–40.75in
Weight:	14.4kg/31.7lb
Max Table Top Size (Square):	760mm/30in
Max Table Top Size (Round):	760mm/30in
Max Table Top Weight:	16kg/35lb
Top Plate Size:	308mm/12in

WARNING: Exceeding maximum recommended table top size and weight will reduce functionality and performance of the technology. See Table Top Size Guide for more info.

KX36

The behemoth—at 36in, this table has the largest span of the range and accommodates larger table tops—ideal for locations catering for groups and families.

ROD
Thicker structural tension rod to hold base together securely.

TOP PLATE
Large reinforced top plate to support larger table tops.

POST
Wider diameter of 102mm/4in for additional structural support with increased wall thickness.

CAST IRON BASE
High-quality casting.

FLAT® TECHNOLOGY INSTALLED
The base and the technology are designed in unison to deliver superior performance and longevity.

SPECIFICATIONS

Material/Finish:	Cast Iron/Textured
Base Span:	915mm/36in
Base Spread:	680mm/27in

DINING HEIGHT

Weight:	20.3kg/44.6lb
Top Plate Size:	445mm/17in
Max Table Top Size (Square):	1200mm/47in
Max Table Top Size (Round):	1500mm/60in
Max Table Top Weight:	25kg/55lb
Post/Column Width:	102mm/4in

BAR HEIGHT

Height:	1035mm/40.75in
Weight:	21.1kg/46.3lb
Max Table Top Size (Square):	1000mm/40in
Max Table Top Size (Round):	1200mm/47in
Post/Column Width:	102mm/4in

HEIGHT-ADJUSTABLE (PNEUMATIC)

Min–Max Height:	701–1035mm/27.6–40.75in
Weight:	18.5kg/40.7lb
Max Table Top Size (Square):	915mm/36in
Max Table Top Size (Round):	915mm/36in
Max Table Top Weight:	16kg/35lb
Top Plate Size:	308mm/12in
Post/Column Width:	76mm/3in

WARNING: Exceeding maximum recommended table top size and weight will reduce functionality and performance of the technology. See Table Top Size Guide for more info.

KT22

Our KT22 bases provide a flexible foundation, ideal for larger rectangular table tops and for tables that cater to customers with accessibility requirements.

Dining Height
CT2030

Product includes two bases as shown.

ROD
Thicker structural tension rod to hold base together securely.

TOP PLATE
Superior quality 3-pronged top plate—ideal for creating maximum space underneath the table top and helping to accommodate guests with accessibility requirements.

POST
Wider diameter of 76mm/3in for structural support with increased wall thickness.

CAST IRON BASE
High-quality casting.

FLAT® TECHNOLOGY INSTALLED
The base and the technology are designed in unison to deliver superior performance and longevity.

ACCESSIBLE

Bar Height
CT2031

Height-Adjustable (Pneumatic)
CT2067

SPECIFICATIONS

Material/Finish:	Cast Iron/Textured
Base Span:	560mm/22in
Base Spread:	128mm/5in
Post/Column Width:	76mm/3in

DINING HEIGHT

Weight:	15.8kg/34.7lb (Combined)
Top Plate Size:	330mm/13in
Max Table Top Weight:	35kg/77lb
Max Table Top Size (Rectangular):	900x2100mm/36x84in

BAR HEIGHT

Height:	1035mm/40.75in
Weight:	18.3kg/40.2lb (Combined)
Top Plate Size:	330mm/13in
Max Table Top Size (Rectangular):	750x1800mm/30x70in

HEIGHT-ADJUSTABLE (PNEUMATIC)

Min–Max Height:	701–1035mm/27.6–40.75in
Weight:	21kg/46.2lb (Combined)
Max Table Top Size (Rectangular):	750x1400mm/30x55in
Max Table Top Weight:	30kg/66lb
Top Plate Size:	308mm/12in

WARNING: Exceeding maximum recommended table top size and weight will reduce functionality and performance of the technology. See Table Top Size Guide for more info.

AUTO-ADJUST KX30

AUTO-ADJUST PX23

UR17 ◆ Our smallest base—ideal for locations using smaller table tops where space is at a premium.

ROD
Thicker structural tension rod to hold base together securely.

TOP PLATE
Superior quality—provides extra strength and stability.

POST
Wider diameter of 76mm/3in for structural support with increased wall thickness.

CAST IRON BASE
High-quality casting.

FLAT® TECHNOLOGY INSTALLED
The base and the technology are designed in unison to deliver superior performance and longevity.

SPECIFICATIONS

Material/Finish:	Cast Iron/Textured
Base Span:	425mm/17in
Base Spread:	425mm/17in

DINING HEIGHT

Weight:	12.7kg/28lb
Top Plate Size:	330mm/13in
Max Table Top Weight:	18kg/40lb
Max Table Top Size (Square):	600mm/24in
Max Table Top Size (Round):	650mm/26in
Post/Column Width:	76mm/3in

WARNING: Exceeding maximum recommended table top size and weight will reduce functionality and performance of the technology. See Table Top Size Guide for more info.

UR22

Our most popular round base, the UR22 is stylish and accommodates a range of tops.

ROD
Thicker structural tension rod to hold base together securely.

TOP PLATE
Superior quality—provides extra strength and stability.

POST
Wider diameter of 76mm/3in for structural support with increased wall thickness.

CAST IRON BASE
High-quality casting.

FLAT® TECHNOLOGY INSTALLED
The base and the technology are designed in unison to deliver superior performance and longevity.

Dining height model also available in stainless steel.

SPECIFICATIONS

Material/Finish:	Cast Iron/Textured
Base Span:	550mm/22in
Base Spread:	550mm/22in

DINING HEIGHT

Weight:	20.1kg/44.2lb
Top Plate Size:	330mm/13in
Max Table Top Size (Square):	800mm/32in
Max Table Top Size (Round):	800mm/32in
Max Table Top Weight:	18kg/40lb
Post/Column Width:	76mm/3in

BAR HEIGHT

Height:	1035mm/40.75in
Weight:	21.4kg/47lb
Weight With Footring:	23.2kg/51.2lb
Max Table Top Size (Square):	650mm/26in
Max Table Top Size (Round):	750mm/30in

HEIGHT-ADJUSTABLE (PNEUMATIC)

Min–Max Height:	720–1054mm/28.3–41.5in
Weight:	21.3kg/46.8lb
Max Table Top Size (Square):	650mm/26in
Max Table Top Size (Round):	750mm/30in
Max Table Top Weight:	16kg/35lb
Top Plate Size:	308mm/12in

WARNING: Exceeding maximum recommended table top size and weight will reduce functionality and performance of the technology. See Table Top Size Guide for more info.

UR30

Our heaviest base, the UR30 is ideal for larger table tops that require a firm footing.

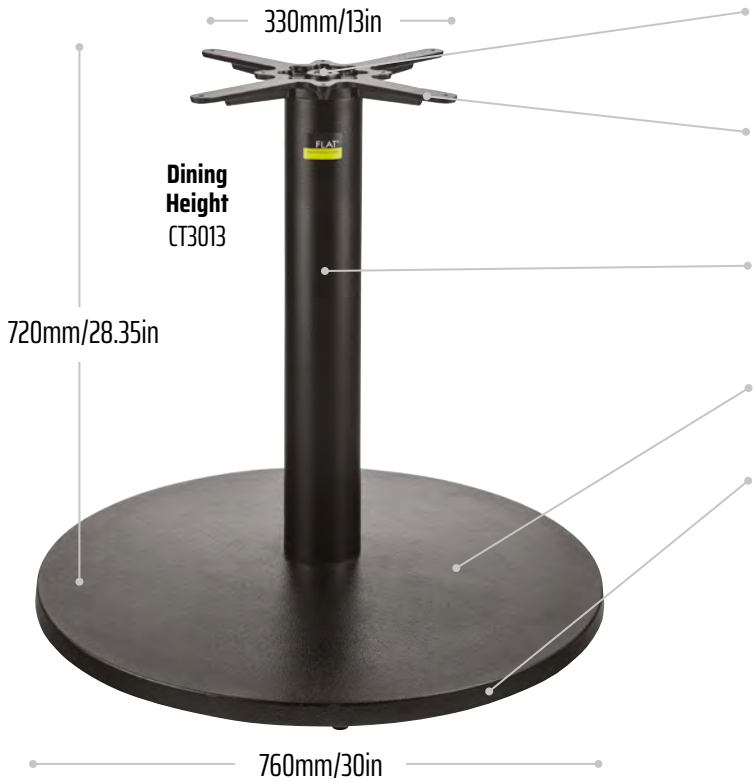

ROD
Thicker structural tension rod to hold base together securely.

TOP PLATE
Superior quality—provides extra strength and stability.

POST
Wider diameter of 102mm/4in for structural support with increased wall thickness.

CAST IRON BASE
High-quality casting.

FLAT® TECHNOLOGY INSTALLED
The base and the technology are designed in unison to deliver superior performance and longevity.

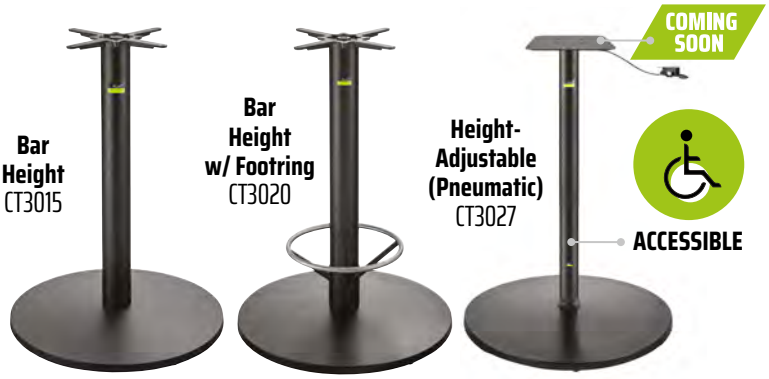

SPECIFICATIONS

Material/Finish:	Cast Iron/Textured
Base Span:	760mm/30in
Base Spread:	760mm/30in

DINING HEIGHT

Weight:	36.1kg/79.4lb
Top Plate Size:	330mm/13in
Max Table Top Size (Square):	1200mm/47in
Max Table Top Size (Round):	1500mm/60in
Max Table Top Weight:	25kg/55lb
Post/Column Width:	102mm/4in

BAR HEIGHT

Height:	1035mm/40.75in
Weight:	36.7kg/80.7lb
Weight With Footring:	38.7kg/85.3lb
Max Table Top Size (Square):	1000mm/42in
Max Table Top Size (Round):	1200mm/47in

HEIGHT-ADJUSTABLE (PNEUMATIC)

Min–Max Height:	720–1054mm/28.3–41.5in
Weight:	37.6kg/82.7lb
Max Table Top Size (Square):	900mm/36in
Max Table Top Size (Round):	900mm/36in
Max Table Top Weight:	16kg/35lb
Top Plate Size:	308mm/12in
Post/Column Width:	76mm/3in

WARNING: Exceeding maximum recommended table top size and weight will reduce functionality and performance of the technology. See Table Top Size Guide for more info.

GS22

◆ Simple square design to complement most environments accommodating tops up to 30in in size.

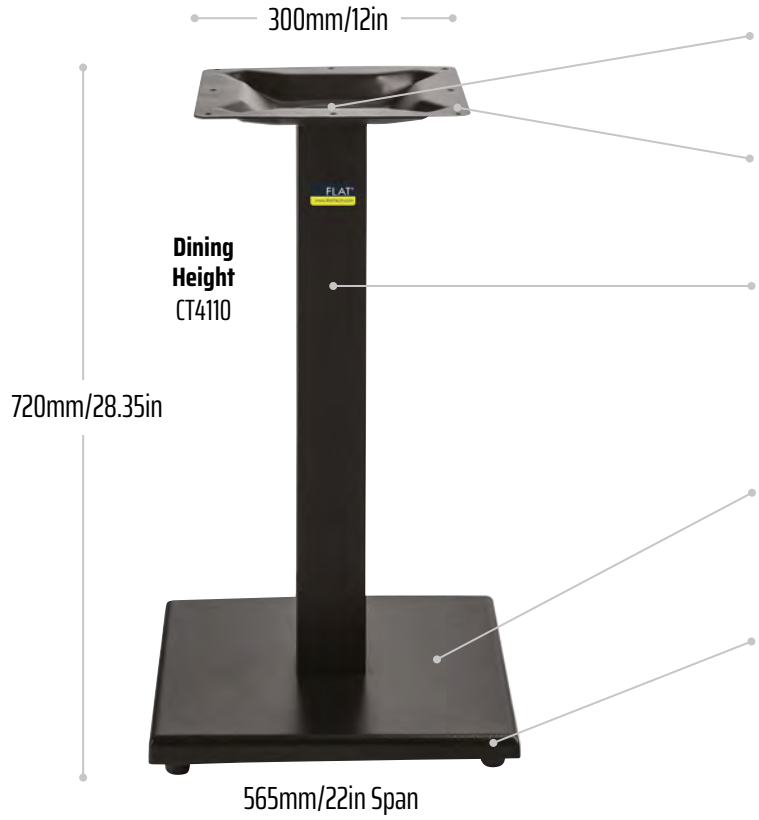

ROD
Thicker structural tension rod to hold base together securely.

TOP PLATE
Superior quality—provides extra strength and stability.

POST
Wider diameter of 80mm/3.15in for structural support with increased wall thickness.

CAST IRON BASE
High-quality casting.

FLAT® TECHNOLOGY INSTALLED
The base and the technology are designed in unison to deliver superior performance and longevity.

SPECIFICATIONS

Material/Finish:	Cast Iron/Textured
Base Span:	565mm/22in
Base Spread:	400mm/15.75in

DINING HEIGHT

Weight:	12.4kg/27.3lb
Top Plate Size:	300mm/12in
Max Table Top Weight:	16kg/35lb
Max Table Top Size (Square):	750mm/30in
Max Table Top Size (Round):	750mm/30in
Post/Column Width:	80mm/3.15in

Dining height model also available in stainless steel.

WARNING: Exceeding maximum recommended table top size and weight will reduce functionality and performance of the technology. See Table Top Size Guide for more info.

PX23

Our ornate design provides a solid footing for a range of tops. With elegant detailing, this base is available in dining and bar height configurations.

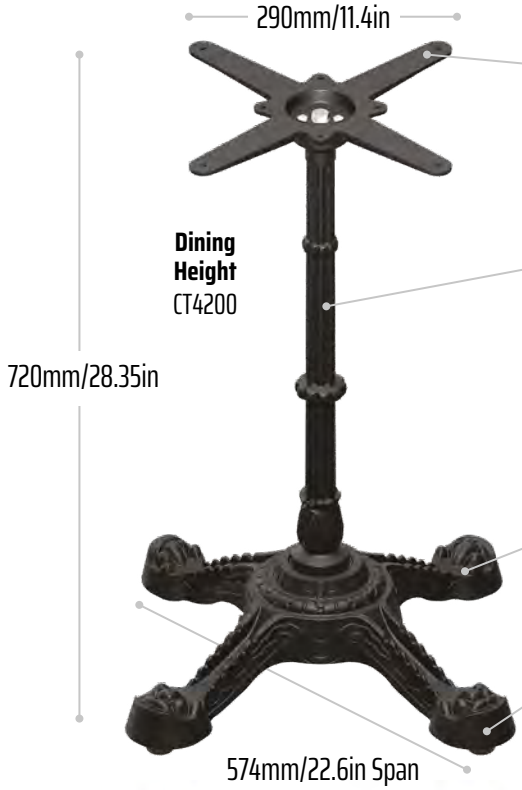

TOP PLATE
Superior quality—provides extra strength and stability.

POST
Solid, ornate post of 31mm/1.2in–46mm/1.8in diameter provides increased structural support.

CAST IRON BASE
High-quality casting.

FLAT® TECHNOLOGY INSTALLED
The base and the technology are designed in unison to deliver superior performance and longevity.

SPECIFICATIONS

Material/Finish:	Cast Iron/Textured
Base Span:	574mm/22.6in
Base Spread:	432mm/17.0in

DINING HEIGHT

Weight:	20.1kg/44.2lb
Top Plate Size:	290mm/11.4in
Max Table Top Size (Square):	750mm/30in
Max Table Top Size (Round):	800mm/32in
Max Table Top Weight:	20kg/44lb
Post/Column Width:	31–46mm/1.2–1.8in

BAR HEIGHT

Height:	1035mm/40.75in
Weight:	23.4kg/51.5lb
Max Table Top Size (Square):	600mm/24in
Max Table Top Size (Round):	650mm/26in

WARNING: Exceeding maximum recommended table top size and weight will reduce functionality and performance of the technology. See Table Top Size Guide for more info.

PT23

Complements the PX table bases and allows restaurants to cater for groups seated around a rectangular table top. A lovely ornate design that suits a range of environments.

TOP PLATE
Superior quality—provides extra strength and stability.

POST
Solid, ornate post of 31–46mm/1.2–1.8in diameter provides increased structural support.

CAST IRON BASE
High-quality casting.

FLAT® TECHNOLOGY INSTALLED
The base and the technology are designed in unison to deliver superior performance and longevity.

ACCESSIBLE

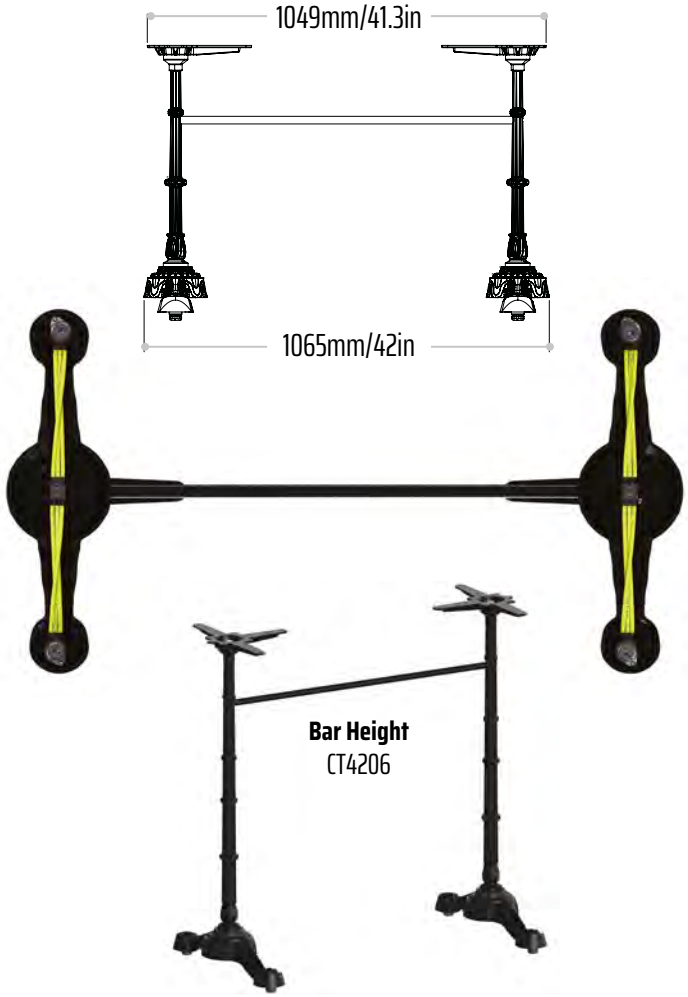

SPECIFICATIONS

Material/Finish:	Cast Iron/Textured
Base Span:	574mm/22.6in
Base Spread:	165mm/6.5in

DINING HEIGHT

Weight:	24kg/52.8lb
(With connection bar)	24.6kg/54.2lb
Top Plate Size:	290mm/11.4in
Max Table Top Size (Rectangular): **(Without connection bar)**	900x2100mm/36x84in
Max Table Top Size (Rectangular): **(With connection bar)**	900x1400mm/36x55in
Max Table Top Weight:	35kg/77lb
Post/Column Width:	31–46mm/1.2–1.8in

BAR HEIGHT

Height:	1035mm/40.75in
Weight:	28kg/61.6lb
(With connection bar)	28.6kg/63.1lb
Max Table Top Size (Rectangular): **(Without connection bar)**	750x1800mm/30x70in
Max Table Top Size (Rectangular): **(With connection bar)**	750x1200mm/30x47in

WARNING: Exceeding maximum recommended table top size and weight will reduce functionality and performance of the technology. See Table Top Size Guide for more info.

SX26

A great solution for indoor or outdoor use. Available in a polished, black, or EP* gray finish. Lightweight and easily maneuverable, these bases stack together when service has finished to clear the area. Available in dining and bar heights.

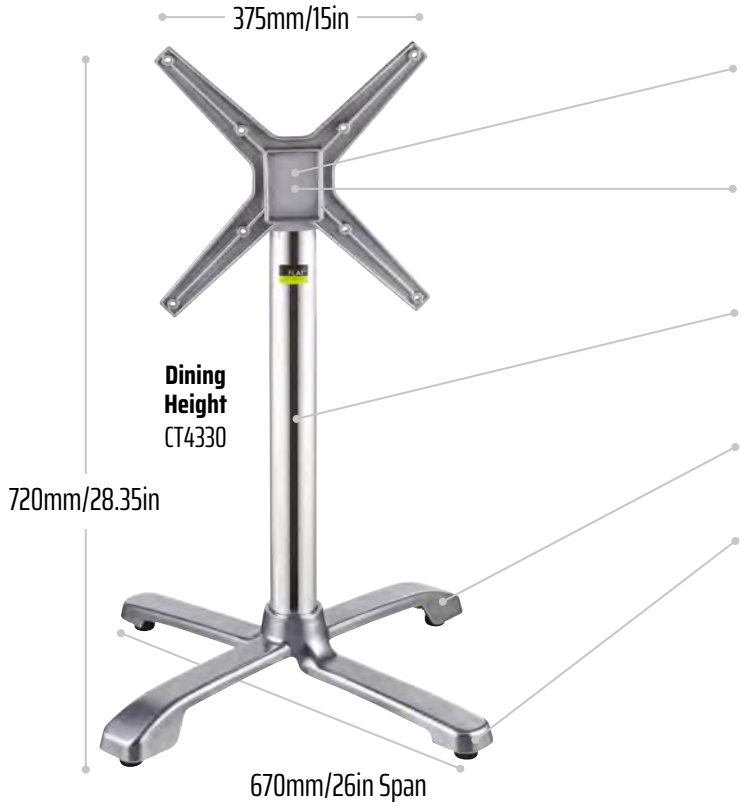

FLIP TOP PLATE
Superior quality top plate—allows stacking of multiple tables for efficient storage.

ROD
Thicker structural tension rod to hold base together securely.

POST
Wider diameter of 65mm/2.56in for structural support with increased wall thickness.

ALUMINUM BASE
High-quality casting.

FLAT® TECHNOLOGY INSTALLED
The base and the technology are designed in unison to deliver superior performance and longevity.

SPECIFICATIONS

Material/Finish:	Polished Aluminum, EP* Gray, or Black Powder Coat
Base Span:	670mm/26in
Base Spread:	476mm/18.75in

DINING HEIGHT

Weight:	5.2kg/11.5lb (6.4kg/14.1lb incl optional weight)
Top Plate Size:	375mm/15in
Max Table Top Size (Square):	800mm/32in
Max Table Top Size (Round):	800mm/32in
Max Table Top Weight:	10kg/22lb
Post/Column Width:	65mm/2.56in

BAR HEIGHT

Height:	1035mm/40.75in
Weight:	6.4kg/14.1lb 7.6kg/16.8lb (incl weight)
Max Table Top Size (Square):	650mm/26in
Max Table Top Size (Round):	750mm/30in
Max Table Top Weight:	8kg/17.5lb

*Our EP (Extra Protection) coating is ideal for outdoor and coastal areas where atmospheric conditions can corrode bases.

WARNING: Exceeding maximum recommended table top size and weight will reduce functionality and performance of the technology.

AUTO-ADJUST ST22 EP

AUTO-ADJUST SX26 BLACK

AUTO-ADJUST KX22

COMING SOON

ST22

The ST22 line has been designed as a complement to the popular SX series with similar styling and construction. Available in polished, black, and EP* (gray) finishes.

ROD
Thicker structural tension rod to hold base together securely.

TOP PLATE
Thicker structural tension rod to hold base together securely.

POST
Wider diameter of 65mm/2.56in for structural support with increased wall thickness.

ALUMINUM BASE
High-quality casting.

FLAT® TECHNOLOGY INSTALLED
The base and the technology are designed in unison to deliver superior performance and longevity.

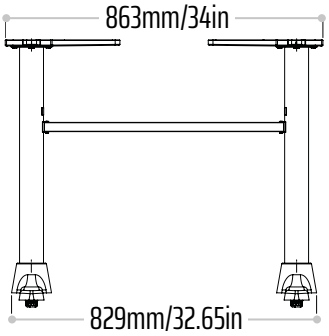

Dining Height (Black)
CT4311

Dining Height (EP*)
CT4312

SPECIFICATIONS

Material/Finish:	Polished Aluminum, EP* Gray, or Black Powder Coat
Base Span:	560mm/22in
Base Spread:	105mm/4.2in

DINING HEIGHT

Weight:	5.9kg/13lb (8.2kg/18.1lb incl optional weights)
Top Plate Size:	345mm/14in
Max Table Top Weight:	17kg/37.5lb
Max Table Top Size (Rectangular):	900x1400mm/36x55in
Post/Column Width:	65mm/2.56in

WARNING: Exceeding maximum recommended table top size and weight will reduce functionality and performance of the technology.

Final designs may vary from those shown. Specifications subject to change.

*Our EP (Extra Protection) coating is ideal for outdoor and coastal areas where atmospheric conditions can corrode bases.

COMING SOON

ST22 Flip-Top

The ST22 is also available in a flip-top version, ideal for concepts in need of more indoor and outdoor dining versatility and storage solutions.

FLIP TOP PLATE
Superior quality top plate—allows stacking of multiple tables for efficient storage.

ROD
Thicker structural tension rod to hold base together securely.

POST
Wider diameter of 65mm/2.56in for structural support with increased wall thickness.

ALUMINUM BASE
High-quality casting . Our stackable design provides an efficient storage solution.

FLAT® TECHNOLOGY INSTALLED
The base and the technology are designed in unison to deliver superior performance and longevity.

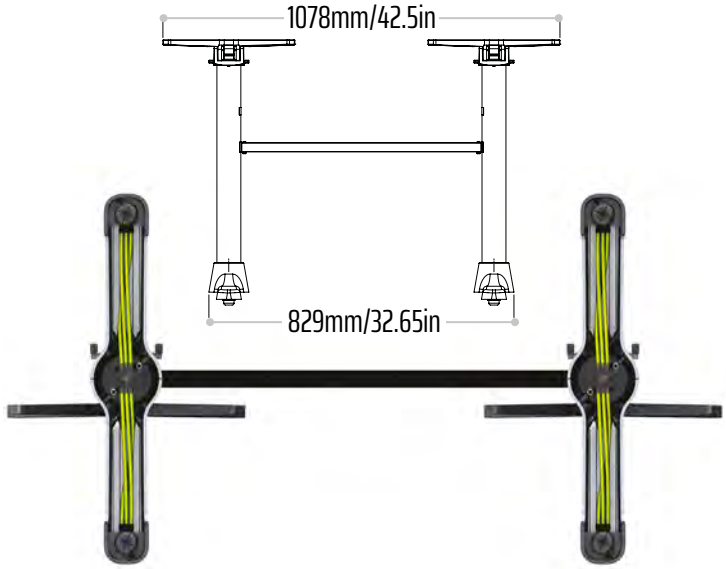

Dining Height (Black)
CT4314

Dining Height (EP*)
CT4315

SPECIFICATIONS

Material/Finish:	Polished Aluminum, EP* Gray, or Black Powder Coat
Base Span:	560mm/22in
Base Spread:	105mm/4.2in

DINING HEIGHT

Weight:	7kg/15.4lb (9.3kg/20.5lb incl optional weights)
Top Plate Size:	345mm/14in
Max Table Top Weight:	14kg/31lb
Max Table Top Size (Rectangular):	800x1200mm/32x47in
Post/Column Width:	65mm/2.56in

WARNING: Exceeding maximum recommended table top size and weight will reduce functionality and performance of the technology.

Final designs may vary from those shown. Specifications subject to change.

*Our EP (Extra Protection) coating is ideal for outdoor and coastal areas where atmospheric conditions can corrode bases.

COMING SOON

YOU DESERVE **A RAISE**

From standard seating at lunch, bar-height for late-night, brunch buffets, or anything in between, your business can now be flexible enough for all customers and functions with the press of a lever.

Convenient and easily adjustable, FLAT's height-adjustable tables combine one of our FLAT® Table Bases with our adjustable pneumatic post. Once installed, our pneumatic post rises or lowers with the press of a lever and the assistance of the server. Our height-adjustable tables provide restaurants and facilities with the ability to adapt to any need—and provide a simple and convenient way to cater at dining, counter or bar height—and anywhere in between. Our height-adjustable tables help operators to cater for customers with accessibility requirements and adhere with local legislation (such as ADA compliance in the USA).

Having height-adjustable table bases means you no longer need tables of varying heights for different applications, which take up storage space and your budget. As with all of our precisely engineered products, you'll be confident knowing that your tables are stable, aligned, and doing what they should—being the centerpiece of a memorable experience.

TABLE BASES | HEIGHT-ADJUSTABLE SERIES

EASILY ADJUSTS
Change your dining setup in seconds to accommodate your clientele or function.

ADJUSTABLE HEIGHT
Transform your dining height tables to bar height, or anything in between with the simple press of a lever.

SAVE MONEY
Many businesses stock two sets of tables, bringing bar height tables out for late-night crowds. Eliminate the extra table costs and take back storage space using our height-adjustable tables.

SAVE TIME
Time spent switching out tables for late-night festivities, re-arranging for buffets, or trying to find tables for those with accessibility requirements is cut dramatically.

ACCESSIBILITY
Easily accommodate guests in wheelchairs, or with other accessibility requirements with a simple adjustment.

STABILIZATION
Gain all the benefits of having FLAT® technology under the table, providing a stable footing.

ALIGNMENT
Perfectly align your tables at whatever height suits you and your guests.

Easily adjust tables to accommodate those with accessibility requirements.

TABLE BASES | HEIGHT-ADJUSTABLE SERIES

COMING SOON

ACCESSIBLE

SUBSTANTIAL, STEEL TOP PLATE

308mm/12in

POST
Wider diameter of 3in/76mm for structural support, increased wall thickness.

PNEUMATIC TECHNOLOGY
Our pneumatic technology, located within the post, is quiet, smooth and allows you to easily and discreetly adjust your table's height. The locking features of the post engage when the lever is released.

CAST IRON BASE
High-quality casting.

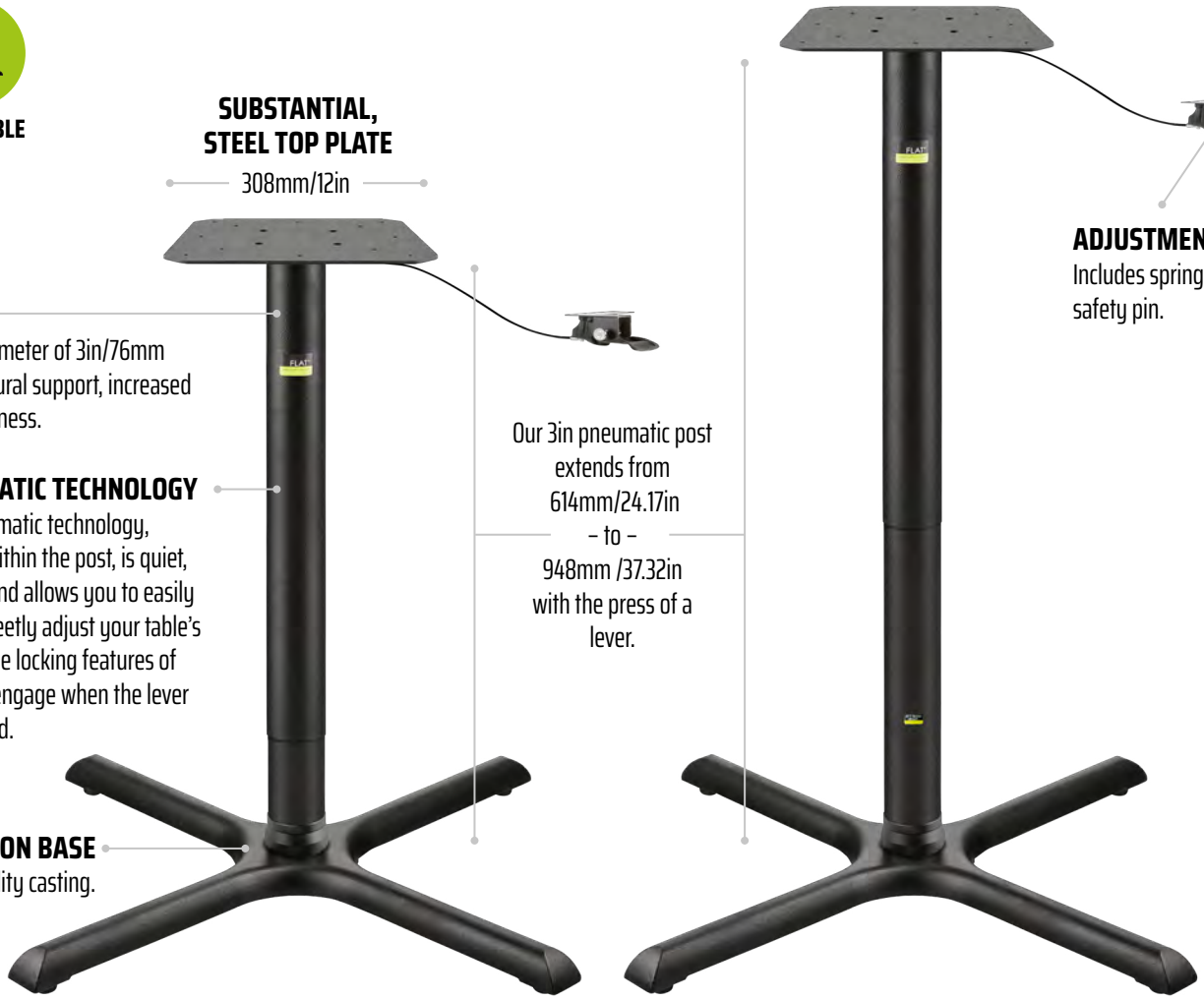

Our 3in pneumatic post extends from 614mm/24.17in – to – 948mm /37.32in with the press of a lever.

ADJUSTMENT LEVER
Includes spring-loaded safety pin.

PULL, PRESS, RELEASE

Our adjustment lever includes a spring-loaded safety pin to prevent accidental adjustment or movement once the table is set to the desired height.

TABLE BASES | HEIGHT-ADJUSTABLE SERIES

COMING SOON

FLAT® TECHNOLOGY INSTALLED BASE
Get all the benefits of having FLAT® technology under the base combined with the great possibilities that our height-adjusting post provides.

KT22 Height-Adjustable (Pneumatic Post)
CT2067

UR22 Height-Adjustable (Pneumatic Post)
CT3026

UR30 Height-Adjustable (Pneumatic Post)
CT3027

KX22 Height-Adjustable (Pneumatic Post)
CT2064

KX2230 Height-Adjustable (Pneumatic Post)
CT2069

KX30 Height-Adjustable (Pneumatic Post)
CT2065

KX36 Height-Adjustable (Pneumatic Post)
CT2066

FLAT® BOLT-DOWN MODELS
Bolts securely to the floor, providing a solid base for your customers.

Bolt-Down Base with Pneumatic Post
CT7000

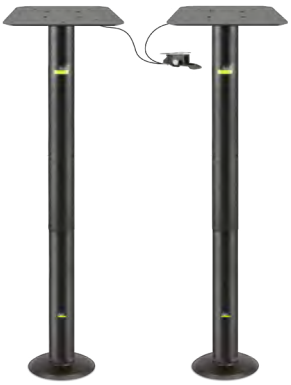

Dual Bolt-Down Bases with Pneumatic Post
CT7001

PRODUCT	MINIMUM OPERATING HEIGHT	MAXIMUM OPERATING HEIGHT
KX22	701mm/27.6in	1035mm/40.75in
KX2230	701mm/27.6in	1035mm/40.75in
KX30	701mm/27.6in	1035mm/40.75in
KX36	701mm/27.6in	1035mm/40.75in
KT22	701mm/27.6in	1035mm/40.75in
UR22	720mm/28.3in	1054mm/41.5in
UR30	720mm/28.3in	1054mm/41.5in
Bolt-Down	671mm/26.4in	1005mm/39.6in

MAKE YOUR EXISTING TABLES STABLE

Fix your existing, wobbly indoor or outdoor tables in minutes by installing Equalizers.

Stop wasting time and money with your existing tables. It's time to equalize!

FLAT® Equalizers are an ideal match for operators wanting to stabilize and align their existing tables in a cost-effective manner. Equalizers replace a table's existing screw-in feet and stabilize the table with a gentle press on the table top. Available in metric and imperial thread sizes to fit most common commercial table bases, Equalizers are a convenient solution. Equalizers encapsulate many of the hydraulic features that FLAT® AUTO-ADJUST Table Bases offer. Once installed, following a press on the table top, Equalizers will adjust to the surface and lock in place—stabilizing the table. Problem solved! Using Equalizers, operators can have their defective tables fixed in a matter of minutes.

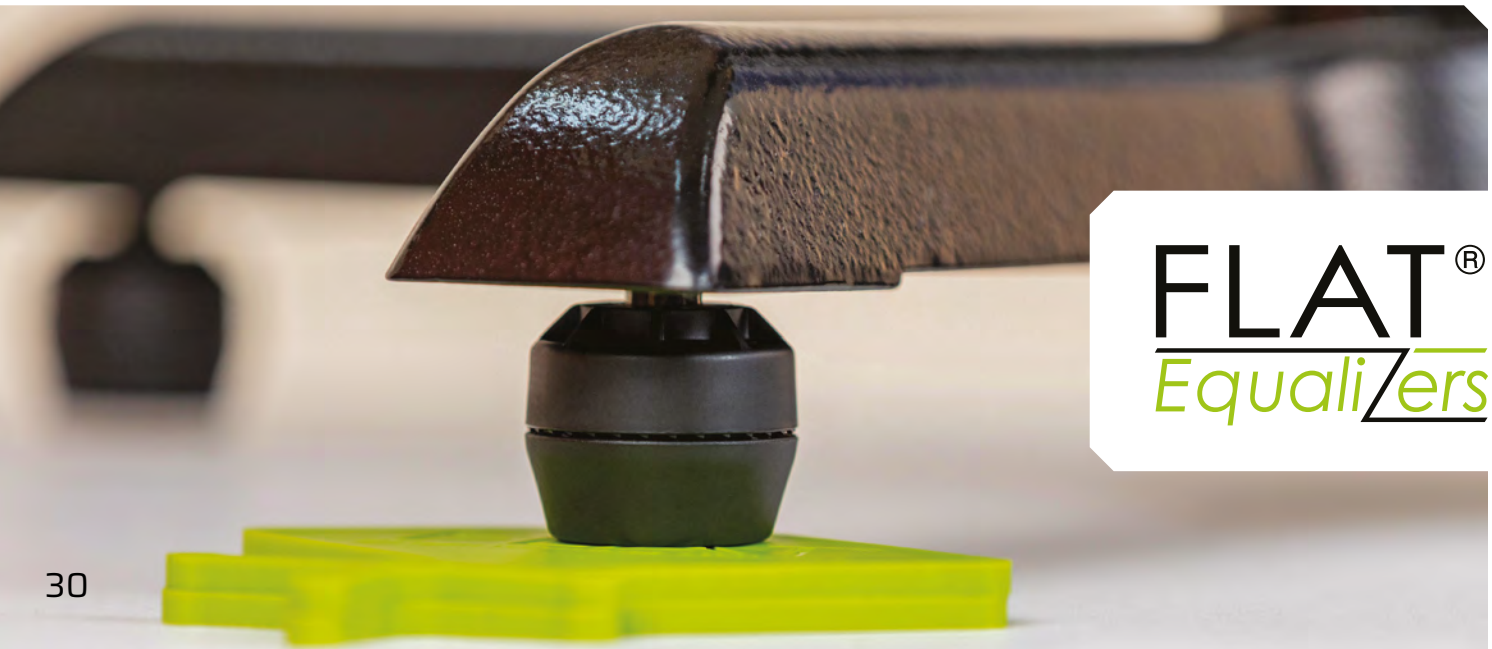

STABILIZATION
With a simple press on the table top, the Equalizers adjust and lock in place, stabilizing the table.

ALIGNMENT
Equalizers assist users in aligning their adjoining table tops. Simply push down or lift the table top edges to the required levels.

DESIGN INTEGRATION
Available in six different thread sizes to integrate with the majority of commercial table bases with screw-in feet.

ENGINEERED DURABILITY
Exceed international standards
(BS EN 581-1:2006 & BS EN 581-3:2017)
for safety, stability, durability, and strength.

QUICKLY INSTALLED
Easily replace your table's existing screw-in feet in seconds.

Each pack contains four table-stabilizing Equalizers.

INDOOR/ OUTDOOR

THREAD SIZE GUIDE

Use this guide to determine your table's thread size.

IMPERIAL (UNC) THREAD SIZES

(GENERALLY USED IN THE USA)

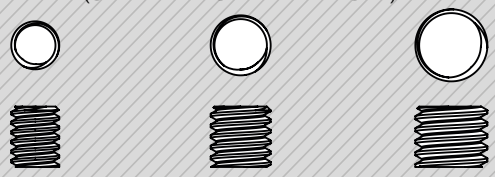

1/4in-20
Most common size in the USA

5/16in-18

3/8in-16

METRIC THREAD SIZES

(GENERALLY USED OUTSIDE OF THE USA)

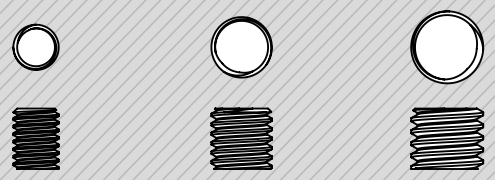

M6

M8
Most common size outside the USA

M10

PRODUCT CODE	PRODUCT
FRB1003A01	FLAT Equalizers 1/4in (4)
FRB1005A01	FLAT Equalizers 3/8in (4)
FRB1004A01	FLAT Equalizers 5/16in (4)
FRB1000A01	FLAT Equalizers M10 (4)
FRB1001A01	FLAT Equalizers M6 (4)
FRB1002A01	FLAT Equalizers M8 (4)

Bradd O'Brien | Howl at the Moon, President

"Our tables take a beating on a night-to-night basis. With the old levelers, the more the tables moved, the bigger the problem became. We've solved that now with FLAT®. You just move them around, you press down, and you're done. The cost is next to nothing with the benefits you get."

NEW

EQUALIZE ECONOMICALLY

FLAT® now offers standard table bases pre-installed with FLAT® Equalizers!

Our EQ Table Bases feature some of the industry's most popular base designs, and coupled with our award-winning FLAT® Equalizers, these bases are solid, cost-effective, and ready to improve your operations in an instant.

Simply press on the table top to create a convenient and stable foundation for your customers.

KX22 EQ

TABLE BASES | EQ TABLE BASES

FLAT KX22 EQ
CT2063

FLAT KX30 EQ
CT2059

FLAT KX36 EQ
CT2068

FLAT KX2230 EQ
CT2062

FLAT KT22 EQ
CT2060

Designs may vary from those shown. Specifications subject to change.

FLAT® Equalizers are highly durable and exceed international standards (BS EN 581-1:2006 & BS EN 581-3:2017) for safety, stability, durability, and strength.

Vicki Nussbaum | Tom+Chee, Owner/Operator

"The wobbly tables were a nuisance for the customers and the staff. People would stick everything under the sun under the tables to balance them out. If I could describe FLAT® Equalizers in one word, I would say they're 'Priceless'."

NEW

IT'S OK TO GET **ATTACHED**

For a more permanent and secure table solution, consider a wall-mounted cantilever base or a bolt-down post base.

While we're famous for our products featuring stabilizing technology, we can do a lot more than that. When our customers told us that they need different table options to support their varying concepts, we listened. Our cantilever and bolt-down bases provide stable dining options with the quality that you would expect from FLAT®.

Unlike other products in the market, our cantilever bases have been designed to be flat-packed, saving our customers shipping space and cost as well as reducing packaging.

Our bolt-down base is also available with our height-adjustable post to provide great flexibility to locations with fixed dining arrangements. Both sets of bases provide the ability to cater for customers with accessibility requirements.

Why not let us be your table base provider of choice and let us know what we can do for you?

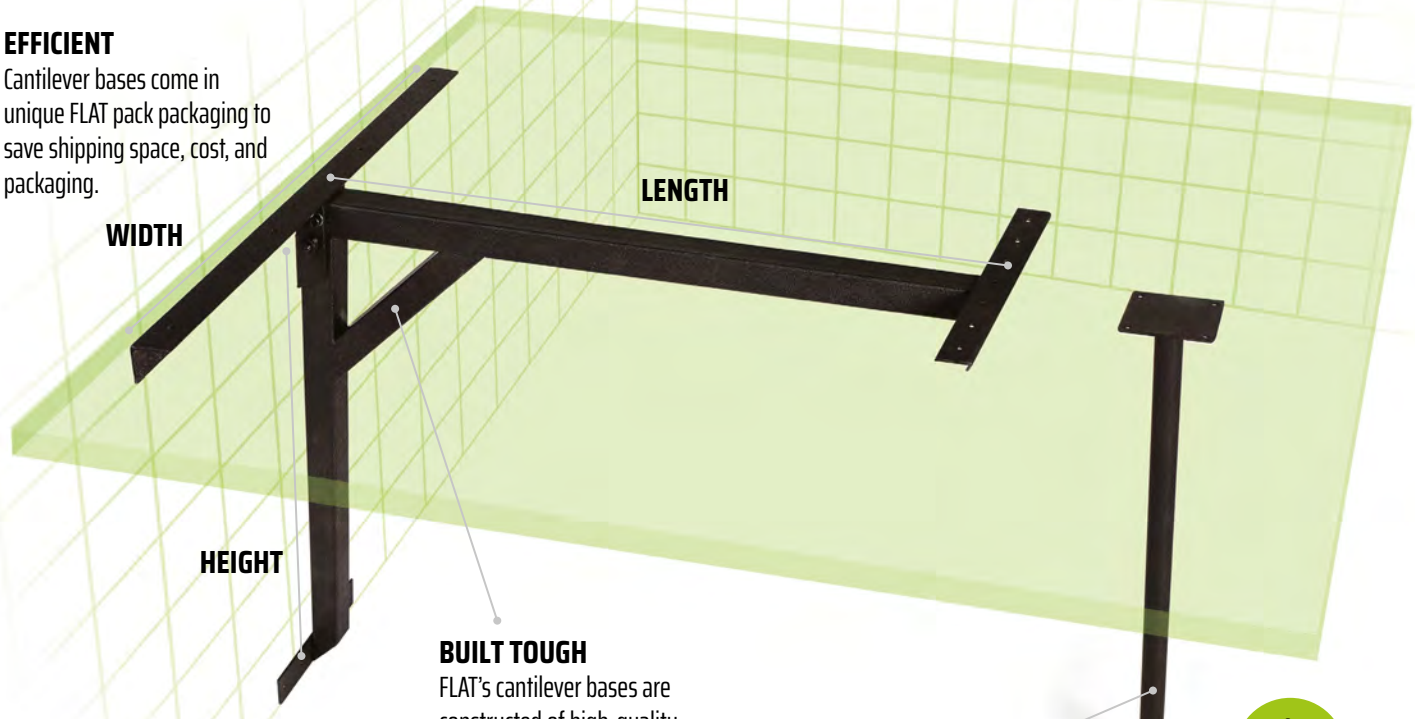

FLAT®
SPECIALIZED
Table Bases

PRODUCT CODE	PRODUCT	DIMENSIONS	WEIGHT	MAX TABLE TOP SIZE
CL2036281A	Cantilever Table Base (20in x 36in)	W: 510mm/20in L: 900mm/36in H: 707mm/28in	6.3kg/13.9lb	800x1200mm/32x48in (pin leg recommended)*
CL2626281A	Cantilever Table Base (26in x 26in)	W: 660mm/26in L: 646mm/26in H: 707mm/28in	6.3kg/13.9lb	965x965mm/38x38in*
CL2636281A	Cantilever Table Base (26in x 36in)	W: 660mm/26in L: 900mm/36in H: 707mm/28in	7kg/15.4lb	965x1200mm/38x48in (pin leg recommended)*
CL2642281A	Cantilever Table Base (26in x 42in)	W: 660mm/26in L: 1053mm/42in H: 707mm/28in	7.35kg/16.2lb	965x1370mm/38x54in (pin leg recommended)*
PL2802A	Pin Leg, Dining Height	H: 711mm/28in (Can be extended by 25mm/1in using the adjustable foot)	1.2kg/2.6lb	(As above)
PL4002A	Pin Leg, Bar Height	H: 1016mm/40in (Can be extended by 25mm/1in using the adjustable foot)	2.3kg/5.1lb	(As above)
BD2802A	Bolt-Down Base	H: 711mm/28in Post/Column Width: 76mm/3in	4.4kg/9.7lb	750x50mm/30x30in or 750mm/30in round top*
CT7000	Bolt-Down Base with Pneumatic Post	H: 671mm/26.4in–1005mm/39.6in	8kg/17.6lb	750x750mm/30x30in or 750mm/30in round top* Max Recommended Weight: 16kg/35lbs
CT7001	Dual (2) Bolt-Down Bases with Pneumatic Posts	H: 671mm/26.4in–1005mm/39.6in	16kg/35.2lb	1400x800mm/55x32in* Max Recommended Weight: 30kg/66lbs

*WARNING: Exceeding the maximum recommended table top size and/or weights and not utilizing the pin leg (where recommended) could reduce the functionality and performance of the technology or table.

FLAT® BOLT-DOWN MODELS

Ideal for locations with fixed seating arrangements.
Bolt these bases into the floor for a stable footing. Combine multiple bases for larger table tops and creating compliant seating arrangements for customers with accessibility requirements.

All cantilever and bolt down bases are made from steel and are protected with a black, textured powder coat.

Bolt-Down Base
BD2802A

Bolt-Down Base with Pneumatic Post
CT7000

Dual Bolt-Down Bases with Pneumatic Posts
CT7001

ALL THIS AND **LOOKS TOO**

If you need to suit a particular style or environment, we're confident that you'll find the perfect FLAT® Table Base.

With over 40 different styles, colors, and materials available, you don't have to sacrifice looks to enjoy the benefits of FLAT.® We have materials designed to endure the elements outdoor, or any indoor setting. Our tables can perfectly compliment authentic features such as wooden floors or exposed beams, and let you utilize indoor and outdoor areas with uneven surfaces that might otherwise be unused.

Cast Iron

Our range of cast iron table bases have a black, textured finish to complement the base. Custom coloring is available for all bases subject to minimum quantities and RAL/Pantone® codes being provided.

Aluminum | Black Finish

Our black powder coated aluminum bases are clean looking and lightweight. An ideal option for users that require an elegant base for indoor or outdoor use.

Aluminum | Polished Finish

Our range of aluminum table bases boast smooth finishes. The standard finish benefits from polished aluminum and is complemented by a protective, transparent lacquer.

Aluminum | EP (Extra Protection)

Our EP finish is an ideal option for outdoor and coastal locations where atmospheric conditions can corrode bases. This smooth, gray, sophisticated finish provides added protection from extreme weathering.

CUSTOM COLORS
Custom colors and finishes are available on request and are subject to minimum order quantities.

Custom-colored bases can support your brand's identity, complement your design and distinguish you in the market.

We provide custom-colored bases to a number of leading brands that require that injection of personality whilst maintaining all the great benefits that FLAT® table bases offer.

FLAT offers this exciting customization option to customers subject to being provided with the required Pantone®/RAL color code.

Costs can vary subject to quantity, production, and shipping costs. Contact your local FLAT representative for a custom-color quotation and lead times.

Nick Sorise | Parker Restaurant Group, Director of Restaurant Openings
"We don't have issues with spillages and breakages from wobbly tables [with FLAT]. It's a non-issue for us. No matter where we open dining space—and on whatever surface we want to showcase—I don't have to worry about the tables."

SUPERIOR BY DESIGN

We know well that details are important, so we're here to help you fulfill your vision by making design easy.

There's nothing worse for architects, designers, and specifiers than attending the grand opening of their most recent concept and finding that the tables wobble and don't align. This can destroy an otherwise impressive design experience and makes visitors think 'what else could be wrong?'.

It's not just the opening night where these issues impact business, but every day. The management, wait staff, and patrons have to deal with those pesky tables ruining the experience, creating frustration, complaints, discomfort, comped drinks and meals and inevitably unsightly napkins and corks propping up the tables. Alternatively, specifiers of FLAT® products can be the heroes! Not only do our products create an outstanding experience and potential reductions in operating costs, they encourage creative design—providing the customer the look and feel that they desire. Use reclaimed feature flooring that may have authentic bumps or grooves and utilize uneven indoor and outdoor areas worry-free to maximize covers.

Satisfy your needs by choosing from a huge range of our self-stabilizing table bases. Can't find the self-stabilizing base you want? Ask us about our custom color coatings, custom base design options or simply add FLAT Equalizers to an alternative base of your choice to stop the wobbles and align adjoining tables.

We have a wealth of resources available to feature in your next design. Contact us to download our latest CAD or 3D files, request a sample, or even a product demonstration.

CREATIVE **LICENSE**

Enjoy the benefits of FLAT's technology in your table designs.

Licensing our patented technology provides designers and manufacturers the flexibility to create unique table bases (and other products) to suit their customers' needs. By incorporating our technology into their designs, licensees can enhance their product and customer value exponentially.

Our licensees can control their product design from start to finish (should they wish to), fully supported by our expert engineering team to ensure successful integration and functionality. Our PAD and Equalizer technologies can be incorporated into a range of products and a variety of materials—including metal, wood and plastic—and be used in indoor or outdoor environments.

Following the agreed product development, testing and sign-off cycles, licensees launch as either a white label or co-branded product. FLAT supplies the technology to the licensee as an OEM component for the duration of the partnership.

CARLICK
CONTRACT FURNITURE
The British manufacturer of choice.

Simon Brennan | Carlick Contract Furniture, Natl. Sales Manager

"Adding FLAT's PAD technology to our wooden table base immediately differentiates our products in a busy marketplace. Our technical teams worked closely together, and the result immediately added value to our product and customer offering."

TABLE BASES | IMPERIAL TABLE TOP SIZE GUIDE

DINING HEIGHT BASES

PRODUCT Table Top Sizes Table Top Weight	ROUND							SQUARE					RECTANGLE										
	24in	30in	36in	42in	48in	52in	60in	24in	30in	32in	36in	42in	24x30in	24x42in	24x48in	30x42in	30x46in	30x48in	30x60in	30x72in	36x48in	36x60in	36x72in
AUTO-ADJUST KX22 Max Square: 30in Max Round: 30in Max: 35lb	●	●						●	●				●										
AUTO-ADJUST KX2230 Max Rectangular: 30x36in Max: 35lb													●										
AUTO-ADJUST KX30 Max Square: 42in Max Round: 42in Max: 44lb		●	●	●				●	●	●	●	●	●	●		●							
AUTO-ADJUST KX36 Max Square: 47in Max Round: 60in Max: 55lb			●	●	●	●	●		●	●	●	●				●	●						
AUTO-ADJUST KT22 Max Rectangular: 36x84in Max: 77lb											●			●	●	●	●	●	●	●	●	●	●
AUTO-ADJUST UR17 Max Square: 24in Max Round: 26in Max: 40lb	●							●															
AUTO-ADJUST UR22 Max Square: 32in Max Round: 32in Max: 40lb	●	●						●	●	●			●										
AUTO-ADJUST UR30 Max Square: 47in Max Round: 60in Max: 55lb		●	●	●	●	●	●		●	●	●	●				●	●						
AUTO-ADJUST GS22 Max Square: 30in Max Round: 30in Max: 35lb	●	●						●	●				●										
AUTO-ADJUST PX23 Max Square: 30in Max Round: 32in Max: 44lb	●	●						●	●				●										
AUTO-ADJUST PT23 Min Length: 42.1in Max Rectangular: 36x55in Max: 77lb														●	●	●	●	●			●		
AUTO-ADJUST SX26 Max Square: 32in Max Round: 32in Max: 22lb		●						●	●	●			●										
AUTO-ADJUST ST22 Min Length: 34.3in Max Rectangular: 36x55in Max: 37.5lb														●	●	●	●	●			●		
AUTO-ADJUST ST22 Flip-Top Min Length: 42.9in Max Rectangular: 32x47in Max: 31lb																	●						

● = Corner to corner set up

Warning: Exceeding maximum recommended table top sizes or weights will reduce functionality and performance of the technology. Larger table top sizes maybe used when multiple bases are installed. When using custom or alternative table top sizes, check our max table top sizes. Contact FLAT or your local stockist about alternative configurations.
Note: Product specifications detailed in our brochure are subject to change. Visit flattech.com for current specifications.

BAR HEIGHT BASES

PRODUCT Table Top Sizes	ROUND							SQUARE					RECTANGLE										
	24in	30in	36in	42in	48in	52in	60in	24in	30in	32in	36in	42in	24x30in	24x42in	24x48in	30x42in	30x46in	30x48in	30x60in	30x72in	36x48in	36x60in	36x72in
AUTO-ADJUST KX22 Max Square: 24in Max Round: 26in	●							●															
AUTO-ADJUST KX2230 Max Rectangular: 24x36in													●										
AUTO-ADJUST KX30 Max Square: 36in Max Round: 36in		●	●					●	●	●	●		●										
AUTO-ADJUST KX36 Max Square: 40in Max Round: 47in			●	●							●												
AUTO-ADJUST KT22 Max Rectangular: 30x70in															●	●	●	●	●				
AUTO-ADJUST UR22 Max Square: 26in Max Round: 30in	●	●						●															
AUTO-ADJUST UR30 Max Square: 42in Max Round: 47in			●	●	●				●	●	●	●				●							
AUTO-ADJUST PX23 Max Square: 24in Max Round: 26in	●							●															
AUTO-ADJUST PT23 Min Length: 42.1in Max Rectangular: 30x47in																●	●						
AUTO-ADJUST SX26 Max Square: 26in Max Round: 30in		●						●															

EQ TABLE BASES

PRODUCT Table Top Sizes Table Top Weight	ROUND							SQUARE					RECTANGLE										
	24in	30in	36in	42in	48in	52in	60in	24in	30in	32in	36in	42in	24x30in	24x42in	24x48in	30x42in	30x46in	30x48in	30x60in	30x72in	36x48in	36x60in	36x72in
FLAT KX22 EQ Max Square: 30in Max Round: 30in Max: 35lb	●	●						●	●				●										
FLAT KX2230 EQ Max Rectangular: 30x36in Max: 35lb													●										
FLAT KX30 EQ Max Square: 42in Max Round: 42in Max: 44lb		●	●	●				●	●	●	●	●	●	●		●							
FLAT KX36 EQ Max Square: 47in Max Round: 60in Max: 55lb			●	●	●	●	●		●	●	●	●				●	●						
FLAT KT22 EQ Max Rectangular: 36x84in Max: 77lb											●			●	●	●	●	●	●	●	●	●	●

● = Corner to corner set up

Warning: Exceeding maximum recommended table top sizes or weights will reduce functionality and performance of the technology. Larger table top sizes maybe used when multiple bases are installed. When using custom or alternative table top sizes, check our max table top sizes. Contact FLAT or your local stockist about alternative configurations.
Note: Product specifications detailed in our brochure are subject to change. Visit flattech.com for current specifications.

TABLE BASES | IMPERIAL TABLE TOP SIZE GUIDE

HEIGHT-ADJUSTABLE TABLES (PNEUMATIC) COMING SOON

PRODUCT Table Top Sizes Table Top Weight	ROUND							SQUARE					RECTANGLE										
	24in	30in	36in	42in	48in	52in	60in	24in	30in	32in	36in	42in	24x30in	24x42in	24x48in	30x42in	30x46in	30x48in	30x60in	30x72in	36x48in	36x60in	36x72in
AUTO-ADJUST KX22 Max Square: 24in Max Round: 26in Max: 35lb	●							●															
AUTO-ADJUST KX2230 Max Rectangular: 24x30in Max: 35lb													●										
AUTO-ADJUST KX30 Max Square: 30in Max Round: 30in Max: 35lb		●						●	●				●										
AUTO-ADJUST KX36 Max Square: 36in Max Round: 36in Max: 35lb			●						●	●	●												
AUTO-ADJUST KT22 Max Rectangular: 30x55in Max: 66lb															●	●	●	●					
AUTO-ADJUST UR22 Max Square: 26in Max Round: 30in Max: 35lb	●	●						●															
AUTO-ADJUST UR30 Max Square: 36in Max Round: 36in Max: 35lb		●	●						●	●	●												
Bolt-Down Single Post Max Square: 30in Max Round: 30in Max: 35lb	●	●						●	●				●										
Dual Bolt-Down Bases Max Rectangular: 32x55in Max: 66lb															●	●	●	●					

SPECIALIZED BASES

PRODUCT Table Top Sizes	ROUND							SQUARE					RECTANGLE										
	24in	30in	36in	42in	48in	52in	60in	24in	30in	32in	36in	42in	24x30in	24x42in	24x48in	30x42in	30x46in	30x48in	30x60in	30x72in	36x48in	36x60in	36x72in
Cantilever 20x36in **(Pin Leg Recommended)** Max Rectangular: 32x48in														●	●	●	●	●					
Cantilever 26x26in Max Rectangular: 38x38in									●	●	●												
Cantilever 26x36in **(Pin Leg Recommended)** Max Rectangular: 38x48in											●					●	●	●			●		
Cantilever 26x42in **(Pin Leg Recommended)** Max Rectangular: 38x54in																●	●	●			●		
Bolt-Down Max Square: 30in Max Round: 30in	●	●						●	●				●										

● = Corner to corner set up

Warning: Exceeding maximum recommended table top sizes or weights will reduce functionality and performance of the technology. Larger table top sizes maybe used when multiple bases are installed. When using custom or alternative table top sizes, check our max table top sizes. Contact FLAT or your local stockist about alternative configurations.
Note: Product specifications detailed in our brochure are subject to change. Visit flattech.com for current specifications.

AUTO-ADJUST KT22

AUTO-ADJUST SX26

Adam Rinella | Burger Lounge, VP of Development

"The guest experience is paramount at Burger Lounge. FLAT® Table Bases support this core value and have become an essential part of how we model our locations."

TABLE BASES | METRIC TABLE TOP SIZE GUIDE

DINING HEIGHT BASES

PRODUCT Table Top Sizes Table Top Weight	ROUND (mm)								SQUARE (mm)				RECTANGLE (mm)										
	600	700	800	900	1000	1050	1200	1500	600	700	800	900	420x 560	700x 500	700x 600	800x 600	840x 560	1000x 600	1110x 700	1200x 700	1200x 800	1400x 800	1600x 900
AUTO-ADJUST KX22 Max Square: 750mm Max Round: 750mm Max: 16kg	●	●							●	●				●	●								
AUTO-ADJUST KX2230 Max Rectangular: 750x900mm Max: 16kg																●	●						
AUTO-ADJUST KX30 Max Square: 750mm Max Round: 750mm Max: 16kg			●	●	●	●			●	●	●	●			●	●	●	●					
AUTO-ADJUST KX36 Max Square: 1200mm Max Round: 1550mm Max: 25kg					●	●	●	●		●	●	●							●	●	●		
AUTO-ADJUST KT22 Max Rectangular: 900x2100mm Max: 35kg																			●	●	●	●	●
AUTO-ADJUST UR17 Max Square: 600mm Max Round: 650mm Max: 18kg	●								●														
AUTO-ADJUST UR22 Max Square: 800mm Max Round: 800mm Max: 18kg	●	●	●						●	●	●				●	●							
AUTO-ADJUST UR30 Max Square: 1200mm Max Round: 1500mm Max: 25kg			●	●	●	●	●	●			●	●									●		
AUTO-ADJUST GS22 Max Square: 750mm Max Round: 750mm Max: 16kg	●	●							●	●			●	●	●								
AUTO-ADJUST PX23 Max Square: 750mm Max Round: 800mm Max: 20kg	●	●	●						●	●				●	●								
AUTO-ADJUST PT23 Min Length: 1070mm Max Rectangular: 900x1400mm Max: 35kg																			●	●	●	●	
AUTO-ADJUST SX26 Max Square: 800mm Max Round: 800mm Max: 10kg		●	●						●	●	●			●	●	●							
AUTO-ADJUST ST22 Min Length: 870mm Max Rectangular: 900x1400mm Max: 17kg																		●	●	●	●	●	
AUTO-ADJUST ST22 Flip-Top Min Length: 1090mm Max Rectangular: 800x1200mm Max: 14kg																			●	●	●		

● = Corner to corner set up

Warning: Exceeding maximum recommended table top sizes or weights will reduce functionality and performance of the technology. Larger table top sizes maybe used when multiple bases are installed. When using custom or alternative table top sizes, check our max table top sizes. Contact FLAT or your local stockist about alternative configurations.
Note: Product specifications detailed in our brochure are subject to change. Visit flattech.com for current specifications.

BAR HEIGHT BASES

PRODUCT Table Top Sizes	ROUND (mm)								SQUARE (mm)				RECTANGLE (mm)										
	600	700	800	900	1000	1050	1200	1500	600	700	800	900	420x 560	700x 500	700x 600	800x 600	840x 560	1000x 600	1110x 700	1200x 700	1200x 800	1400x 800	1600x 900
AUTO-ADJUST KX22 Max Square: 600mm Max Round: 650mm	●								●														
AUTO-ADJUST KX2230 Max Rectangular: 600x900mm																●	●						
AUTO-ADJUST KX30 Max Square: 900mm Max Round: 900mm			●	●	●	●			●	●	●	●				●							
AUTO-ADJUST KX36 Max Square: 1000mm Max Round: 1200mm					●	●	●				●	●											
AUTO-ADJUST KT22 Max Rectangular: 750x1800mm																		●	●	●			
AUTO-ADJUST UR22 Max Square: 650mm Max Round: 750mm	●	●							●														
AUTO-ADJUST UR30 Max Square: 1000mm Max Round: 1200mm			●	●	●	●	●				●	●					●						
AUTO-ADJUST PX23 Max Square: 600mm Max Round: 650mm	●								●														
AUTO-ADJUST PT23 Min Length: 1070mm Max Rectangular: 750x1200mm																			●	●			
AUTO-ADJUST SX26 Max Square: 650mm Max Round: 750mm		●							●														

EQ TABLE BASES

PRODUCT Table Top Sizes Table Top Weight	ROUND (mm)								SQUARE (mm)				RECTANGLE (mm)										
	600	700	800	900	1000	1050	1200	1500	600	700	800	900	420x 560	700x 500	700x 600	800x 600	840x 560	1000x 600	1110x 700	1200x 700	1200x 800	1400x 800	1600x 900
FLAT KX22 EQ Max Square: 750mm Max Round: 750mm Max: 16kg	●	●							●	●				●	●								
FLAT KX2230 EQ Max Rectangular: 750x900mm Max: 16kg																●	●						
FLAT KX30 EQ Max Square: 1050mm Max Round: 1050mm Max: 20kg			●	●	●	●			●	●	●	●			●	●	●	●					
FLAT KX36 EQ Max Square: 1200mm Max Round: 1500mm Max: 25kg					●	●	●	●		●	●	●							●	●	●		
FLAT KT22 EQ Max Rectangular: 900x2100mm Max: 35kg																			●	●	●	●	●

● = Corner to corner set up

Warning: Exceeding maximum recommended table top sizes or weights will reduce functionality and performance of the technology. Larger table top sizes maybe used when multiple bases are installed. When using custom or alternative table top sizes, check our max table top sizes. Contact FLAT or your local stockist about alternative configurations.
Note: Product specifications detailed in our brochure are subject to change. Visit flattech.com for current specifications.

TABLE BASES | METRIC TABLE TOP SIZE GUIDE

HEIGHT-ADJUSTABLE TABLES (PNEUMATIC)

COMING SOON

PRODUCT Table Top Sizes Table Top Weight	ROUND (mm)								SQUARE (mm)				RECTANGLE (mm)										
	600	700	800	900	1000	1050	1200	1500	600	700	800	900	420x 560	700x 500	700x 600	750x 600	840x 560	1000x 600	1110x 700	1200x 700	1200x 800	1400x 800	1600x 900
AUTO-ADJUST KX22 Max Square: 600mm Max Round: 650mm Max: 16kg	●								●														
AUTO-ADJUST KX2230 Max Rectangular: 600x760mm Max: 16kg																●							
AUTO-ADJUST KX30 Max Square: 760mm Max Round: 760mm Max: 16kg									●	●						●							
AUTO-ADJUST KX36 Max Square: 915mm Max Round: 915mm Max: 16kg				●						●	●	●											
AUTO-ADJUST KT22 Max Rectangular: 750x1400mm Max: 30kg																		●	●	●			
AUTO-ADJUST UR22 Max Square: 650mm Max Round: 750mm Max: 16kg	●	●							●														
AUTO-ADJUST UR30 Max Square: 900mm Max Round: 900mm Max: 16kg			●	●							●	●											
Bolt-Down Single Post Max Square: 750mm Max Round: 750mm Max: 16kg	●	●							●	●			●	●	●								
Dual Bolt-Down Bases Max Rectangular: 800x1400mm Max: 30kg																		●	●	●	●	●	

SPECIALIZED BASES

PRODUCT Table Top Sizes	ROUND (mm)								SQUARE (mm)				RECTANGLE (mm)										
	600	700	800	900	1000	1050	1200	1500	600	700	800	900	420x 560	700x 500	700x 600	800x 600	840x 560	1000x 600	1110x 700	1200x 700	1200x 800	1400x 800	1600x 900
Cantilever 20x36in **(Pin Leg Recommended)** Max Rectangular: 800x1200mm											●							●	●	●	●		
Cantilever 26x26in Max Square: 965mm										●	●	●											
Cantilever 26x36in **(Pin Leg Recommended)** Max Rectangular: 965x1200mm																			●	●	●		
Cantilever 26x42in **(Pin Leg Recommended)** Max Rectangular: 965x1370mm																			●	●	●		
Bolt-Down Max Square: 750mm Max Round: 750mm	●	●							●	●			●	●	●								

● = Corner to corner set up

Warning: Exceeding maximum recommended table top sizes or weights will reduce functionality and performance of the technology. Larger table top sizes maybe used when multiple bases are installed. When using custom or alternative table top sizes, check our max table top sizes. Contact FLAT or your local stockist about alternative configurations.
Note: Product specifications detailed in our brochure are subject to change. Visit flattech.com for current specifications.

PRODUCT INDEX

AUTO-ADJUST SERIES

AUTO-ADJUST GS22 ..... 19, 40, 44
AUTO-ADJUST KT22 ..... 14, 36, 40, 44
AUTO-ADJUST KT22 - Bar Height 14, 41, 45
AUTO-ADJUST KX22 ..... 10, 23, 40, 44
AUTO-ADJUST KX22 - Bar Height 10, 41, 45
AUTO-ADJUST KX22 - Bar Height w/ Footring 10, 41, 45
AUTO-ADJUST KX2230 ..... 11, 40, 44
AUTO-ADJUST KX2230 - Bar Height 11, 41, 45
AUTO-ADJUST KX2230 - Bar Height w/ Footring 11, 41, 45
AUTO-ADJUST KX30 ..... 8, 9, 12, 15, 40, 44
AUTO-ADJUST KX30 - Bar Height 12, 41, 45
AUTO-ADJUST KX30 - Bar Height w/ Footring 12, 41, 45
AUTO-ADJUST KX36 ..... 13, 40, 44
AUTO-ADJUST KX36 - Bar Height 13, 41, 45
AUTO-ADJUST PT23 ..... 21, 40, 44
AUTO-ADJUST PT23 - Bar Height 21, 41, 45
AUTO-ADJUST PX23 ..... 15, 20, 40, 44
AUTO-ADJUST PX23 - Bar Height 20, 41, 45
AUTO-ADJUST ST22 ..... 24, 40, 44
AUTO-ADJUST ST22 (Black) 24, 40, 44
AUTO-ADJUST ST22 (EP) 23, 24, 40, 44
AUTO-ADJUST ST22 - Flip-Top 25, 40, 44
AUTO-ADJUST ST22 (Black) - Flip-Top 25, 40, 44
AUTO-ADJUST ST22 (EP) - Flip-Top 25, 40, 44
AUTO-ADJUST SX26 ..... 22, 23, 36, 40, 44
AUTO-ADJUST SX26 - Bar Height 22, 41, 45
AUTO-ADJUST SX26 (Black) 22, 23, 36, 40, 44
AUTO-ADJUST SX26 (Black) - Bar Height 22, 41, 45
AUTO-ADJUST SX26 (EP) 22, 36, 40, 44
AUTO-ADJUST SX26 (EP) - Bar Height 22, 41, 45
AUTO-ADJUST UR17 ..... 16, 40, 44
AUTO-ADJUST UR22 ..... 3, 9, 17, 40, 44
AUTO-ADJUST UR22 - Bar Height 17, 41, 45
AUTO-ADJUST UR22 - Bar Height w/ Footring 17, 41, 45
AUTO-ADJUST UR30 ..... 18, 40, 44
AUTO-ADJUST UR30 - Bar Height 18, 41, 45
AUTO-ADJUST UR30 - Bar Height w/ Footring 18, 41, 45

EQ TABLE BASES

FLAT® KX22 EQ 32, 33, 41, 45
FLAT® KX2230 EQ 33 41, 45
FLAT® KX30 EQ 33 41, 45
FLAT® KX36 EQ 33, 41, 45
FLAT® KT22 EQ 33, 41, 45

HEIGHT-ADJUSTABLE (PNEUMATIC)

AUTO-ADJUST KT22 - Height-Adjustable 29, 42, 46
AUTO-ADJUST KX22 - Height-Adjustable 29, 42, 46
AUTO-ADJUST KX2230 - Height-Adjustable 29, 42, 46
AUTO-ADJUST KX30 - Height-Adjustable 26, 27, 28, 29, 42, 46
AUTO-ADJUST KX36 - Height-Adjustable 29, 42, 46
AUTO-ADJUST UR22 - Height-Adjustable 29, 42, 46
AUTO-ADJUST UR30 - Height-Adjustable 29, 42, 46
Bolt-Down - Height-Adjustable Base 29, 35, 42, 46
Dual Bolt-Down - Height-Adjustable Bases 29, 35, 42, 46

SPECIALIZED TABLE BASES

Bolt-Down 34, 35, 42, 46
Bolt-Down - Height-Adjustable Base 29, 34, 35, 42, 46
Dual Bolt-Down - Height-Adjustable Bases 29, 34, 35, 42, 46
Cantilever 20x36in 34, 35, 42, 46
Cantilever 26x26in 34, 35, 42, 46
Cantilever 26x36in 34, 35, 42, 46
Cantilever 26x42in 34, 35, 42, 46
Pin Leg, Dining Height 34, 35, 42, 46
Pin Leg, Bar Height 34, 35, 42, 46

EQUALIZERS

FLAT® Equalizers 1/4in Pack 3, 30, 31
FLAT® Equalizers 3/8in Pack 3, 30, 31
FLAT® Equalizers 5/16in Pack 3, 30, 31
FLAT® Equalizers M6 Pack 3, 30, 31
FLAT® Equalizers M8 Pack 3, 30, 31
FLAT® Equalizers M10 Pack 3, 30, 31

David DuBois | Tasty Burger, CEO

"It is not often that an innovation comes along and completely eliminates a systemic problem. Every restaurant operator in the world should be using these. The solution is not expensive and does not bog down staff with training."

FLAT®

engineering stability

FLAT Pty Ltd. - Head Office and Engineering Facility
Unit 35, 28 Barcoo Street,
Chatswood, Sydney,
NSW 2067, Australia
Phone: +61 (0)2 9417 6597
Email: Info@FlatTech.com

FLAT Tech Inc.
1900 E. Golf Road, Suite 950,
Schaumburg, IL 60173, United States
Phone: +1-855-999-3528
Email: CustServ@FlatTech.com

FLAT Tech Inc. (Distribution Center)
409 West 76th Street, Suite B,
Davenport, IA 52806,
United States
Phone: +1-855-999-3528
Email: CustServ@FlatTech.com

FLAT Technologies Ltd.
Suite C7, Swan House Business Centre, The Park
Market Bosworth,
Warwickshire,
CV13 OLJ, United Kingdom
Phone: +44 (0)8442479411
Email: Info@FlatTech.com

FLATTECH.COM